ALAN T. CARR

QUALITY BATHROOMS SINCE 1972

CONCERT BATHE EASY RH (TBE008)

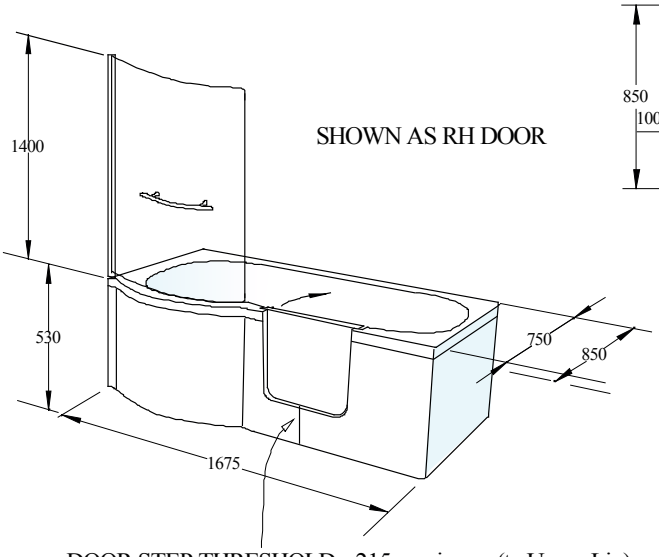

SHOWN AS RH DOOR

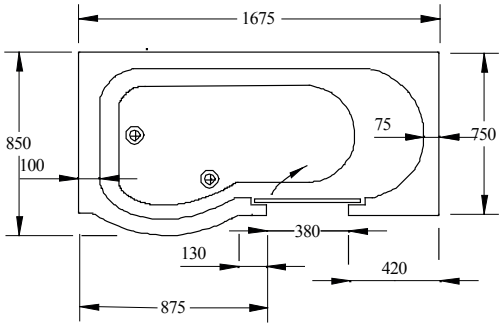

MEASUREMENT IN MILLIMETERS

DOOR STEP THRESHOLD - 215 maximum-(to Upper Lip)