ALAN T. CARR

QUALITY BATHROOMS SINCE 1972

SOLARNA BATHE EASY LH (TBE005)
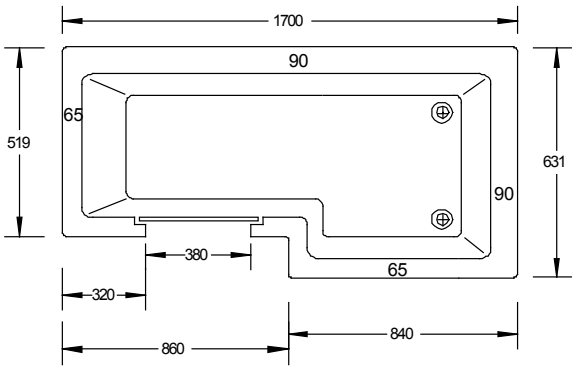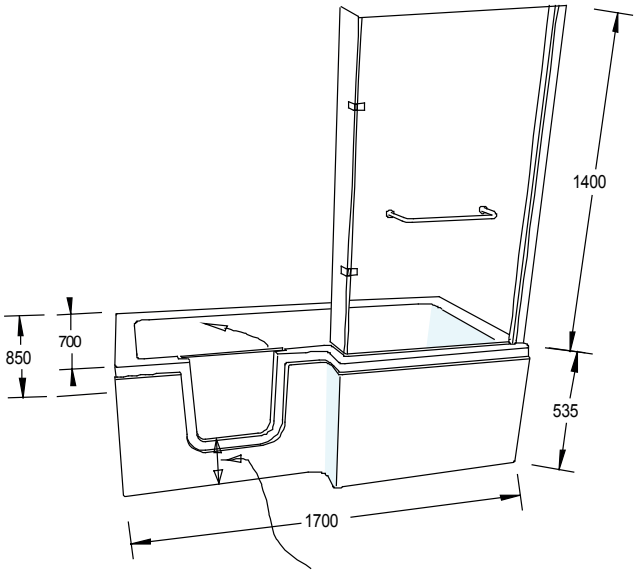
SHOWN AS LH DOOR