ALAN T. CARR

QUALITY BATHROOMS SINCE 1972
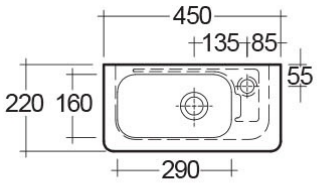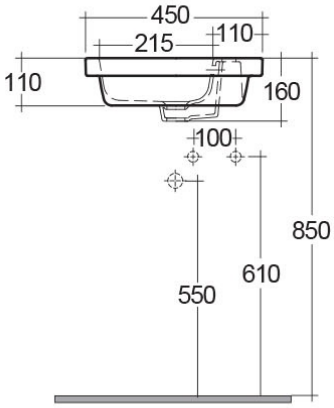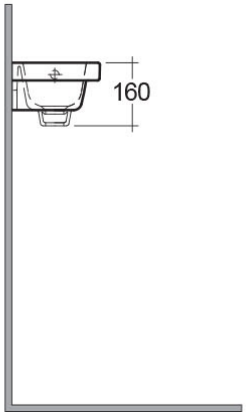
HAVEN 450 WH BASIN (RAK043)