ALAN T. CARR

QUALITY BATHROOMS SINCE 1972
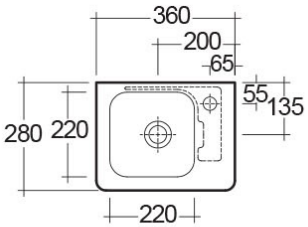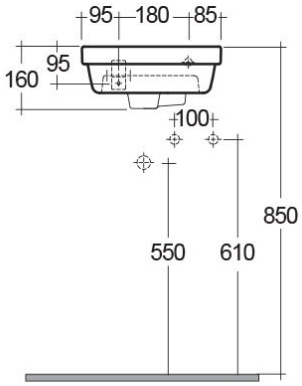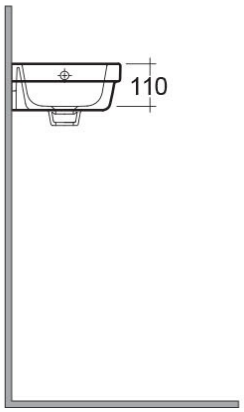
# HAVEN 360 WH BASIN (RAK042)